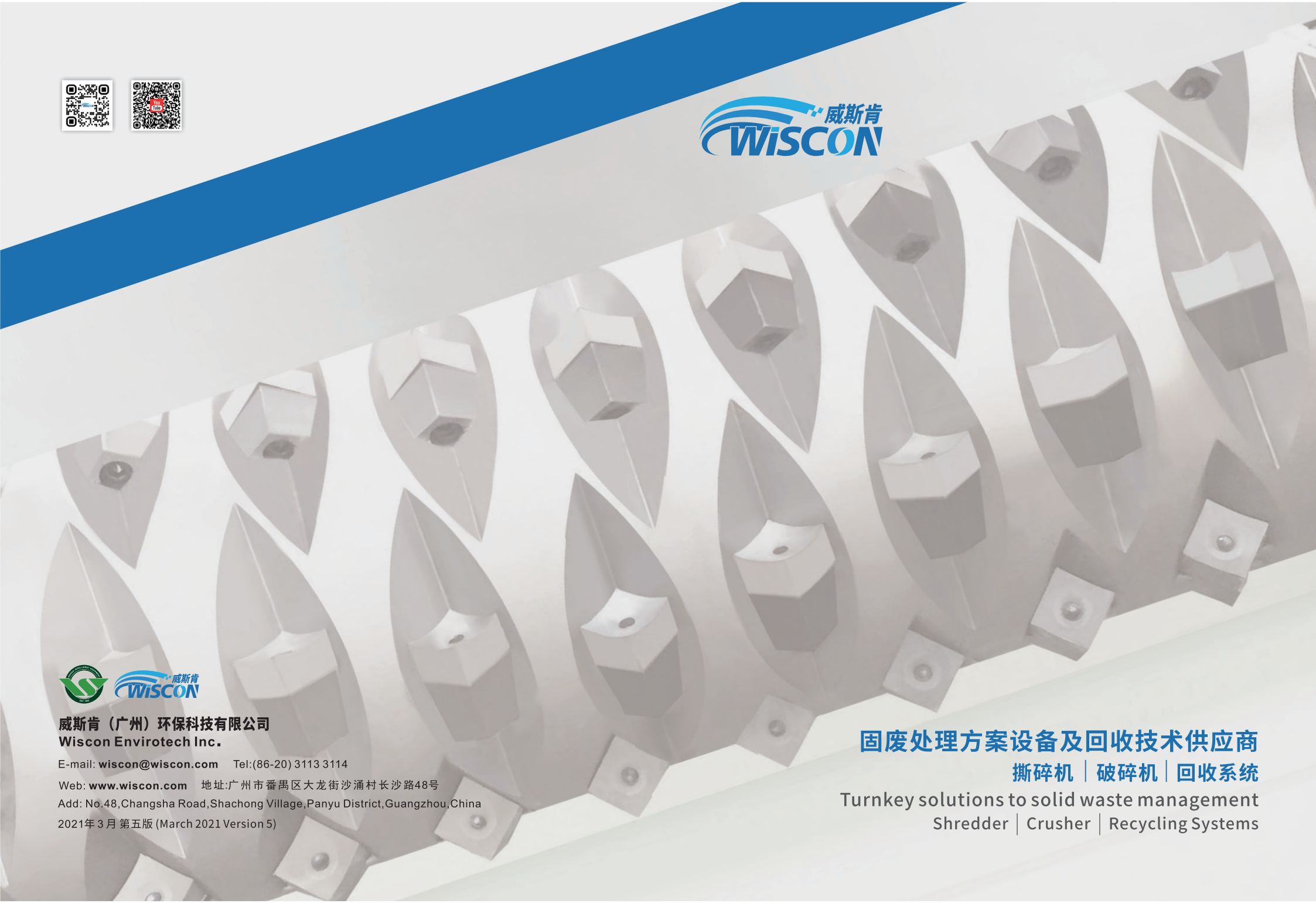

威斯肯（广州）环保科技有限公司
Wiscon Envirotech Inc.

E-mail: wiscon@wiscon.com Tel:(86-20) 3113 3114

Web: www.wiscon.com 地址:广州市番禺区大龙街沙涌村长沙路48号

Add: No.48,Changsha Road,Shachong Village,Panyu District,Guangzhou,China

2021年3月 第五版 (March 2021 Version 5)

固废处理方案设备及回收技术供应商

撕碎机 | 破碎机 | 回收系统

Turnkey solutions to solid waste management

Shredder | Crusher | Recycling Systems

赋予固废生命力
Vitalize waste

大型双轴撕碎机

Double Shaft Shredder - DL Series

超大扭矩，万物皆可撕碎

Exceptionally High Torque to Smash It All

DS双轴撕碎机可处理多样的废固物料。与单轴撕碎机相比，此系列**转速更低，扭矩更大**，效率更高。被广泛应用于工业垃圾，城市固态垃圾以及其它综合性废弃物的回收处理。其结构较为简洁紧凑，可对开式的机箱和轴承座便于维护和保养。

由于该设备不含筛网，常被用作**一级破碎**，破碎颗粒的大小取决于刀片的厚度。

DS Series double shaft shredders can handle a wide range of solid waste. Compared to single shaft shredder, this series has **lower speed**, **higher torque**, and higher efficiency. Its structure is relatively compact and maintenance-friendly with maintenance door that provides full access to crushing chamber and bearing housing. Because the shredder is screenless, it is often used as **primary shredding**, and its shredded particle size depends on the blade thickness.

应用范围 | Applications

- 垃圾衍生燃料：城市固态废物，工业垃圾，木材废料，工业废纸，轮胎，塑料，地毯等；
- 金属材料：铝材，有色金属，无色金属，金属桶，废旧汽车等；
- 电子电器：电子废料，电子设备，废旧家电等；
- 塑料：化工桶，大块塑料，薄膜等。
- RDF(Refuse Derived Fuel): MSW, industry waste, wood, paper, tires, plastics, etc.
- Metal materials: Aluminum, ferrous, non-ferrous, steel drums, waste automative, etc.
- Electronics: WEEE, electronic equipment, waste household appliance, etc.
- Aluminum: Cans, aluminum product, building material, sheet, etc.
- Plastic: Plastic drum, plastic lump, film, etc.

性能特点 | Features

- 刀体采用高合金42CrMo，有利于大功率撕碎。
- 配合花键和六方轴，实现扭力分布均匀，延长主轴寿命。
- 主要的电气元件采用西门子和施耐德等国际品牌。
- 自动过载保护，具有反转功能，避免机器过载和卡死。
- Knives adopt alloy steel 42CrMo realizing heavy-duty size reduction.
- Driving torque is evenly distributed to the shaft, thanks to splined teeth and hex shaft.
- Main electrical components are trusted brands such as Siemens and Schneider.
- Auto-reverse system re-orients rotor direction when motor overload & material jam.

搭配撕碎机和输送带，可组建成简易破碎线。
Integrating with shredder and conveyor to set up a shredding system.

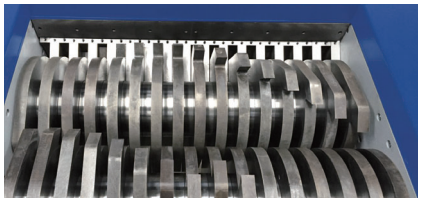

双轴机刀体（标配），刀片厚度可选。
Standard rotor whose knife thichness is customizable.

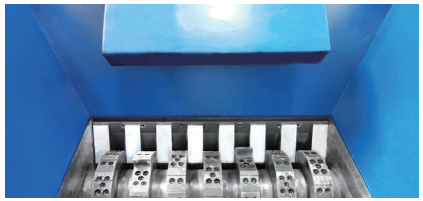

可拆卸刀片，最大化减少换刀时间。
Detachable knife greatly saves your knife replacement time.

两台独立电机驱动加上高安全系数减速机产出超高扭矩。
2 independent driveswith gear reducers bring a high torque.

推料装置（可选）辅助推送物料，提高产量。
Vertical pusher is optional for hollow and gigantic materials.

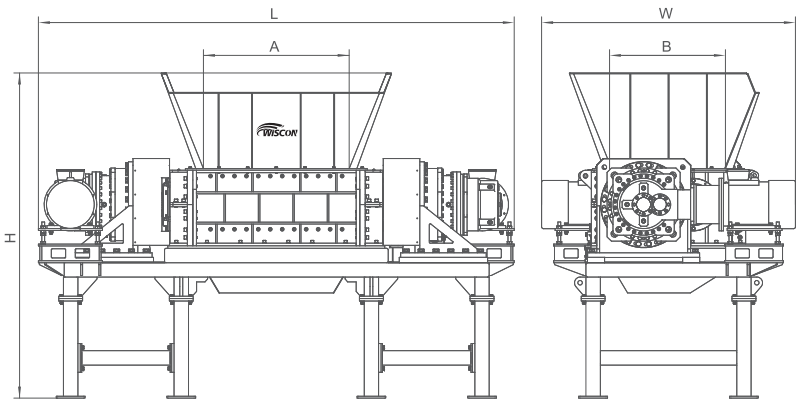

技术参数 | Specifications

项目Item \ 型号Model	DL4130	DL4150	DL5150	DL5180	DL6150	DL6180	DL6220
破碎室尺寸A×B (mm) Crushing chamber	1300×995	1500×995	1500×1150	1800×1150	1500×1450	1800×1450	2200×1450
刀辊直径 Rotor diameter (mm)	520	520	620	620	750	750	750
刀片厚度 Blade thickness (mm)	50/75/100						
动刀数量 Rotor knife qty (pcs)	26/17/13	30/20/15	30/20/15	36/24/18	30/20/15	36/24/18	44/29/22
电机功率 Motor Power (kW)	37+37	45+45	75+75	90+90	55+55	90+90	110+110
外型尺寸L×W×H Dimension (mm)	4590×2210×2600	4890×2210×2600	5150×2270×2600	6340×2610×4000	6993×3045×4000	7110×3342×4000	7986×3284×3760
整机重量 Weight (kg)	9500	11500	17400	20500	22000	26800	33700

备注：1.刀片厚度和刀体爪数可根据需要进行选配；Blade thickness and number of tooth can be selected as required.

2.转速、功率可根据需要进行选配。Rotor speed and motor can be customized as required.

产品规格若有变更，恕不另行通知。We reserve the right to change specifications without prior notice.